Surface Areas of Prisms

Name:_____Per:___ 11-2 **SA of Prisms**

Warm-up

Find the area of each net.

1.

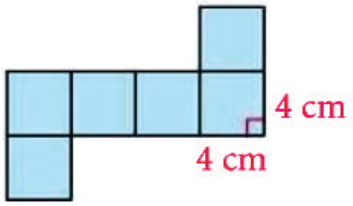

2.

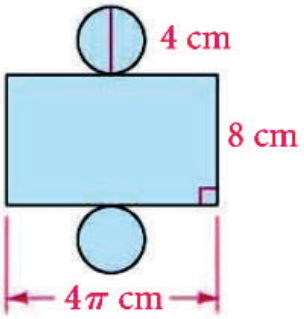

3.

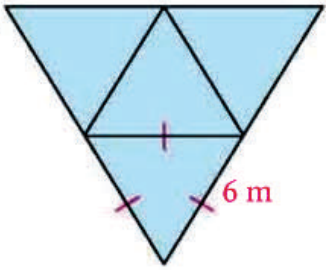

Notes

A **prism** is a polyhedron with exactly two congruent, parallel faces, called **bases.** Other faces are **lateral faces.** You name a prism by the shape of its bases.

An **altitude** of a prism is a perpendicular segment that joins the planes of the bases. The **height** h of the prism is the length of an altitude.

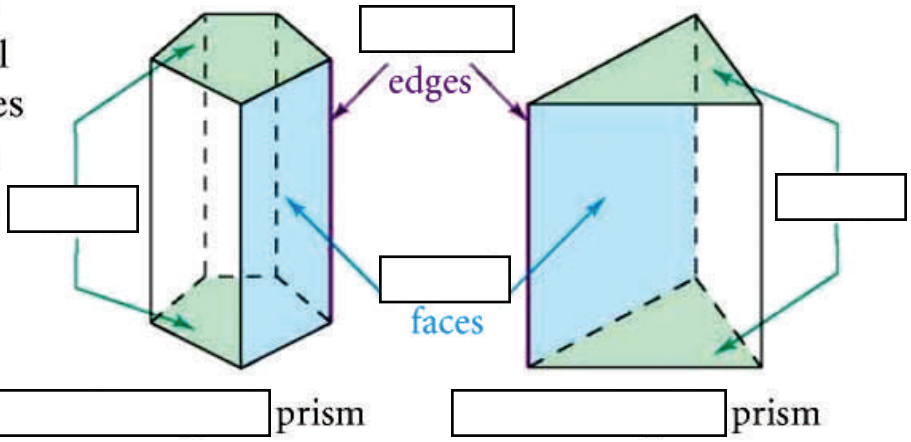

A prism may either be right or oblique.

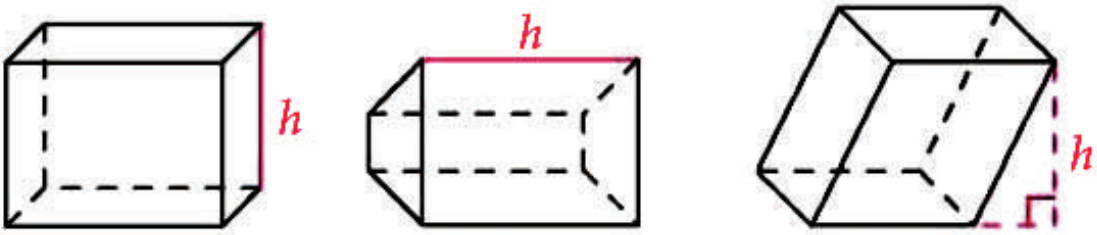

prisms **prism**

The **lateral area** of a prism is the sum of the areas of the lateral faces. The **surface area** is the sum of the lateral area and the area of the two bases.

Finding Surface Area of a Prism

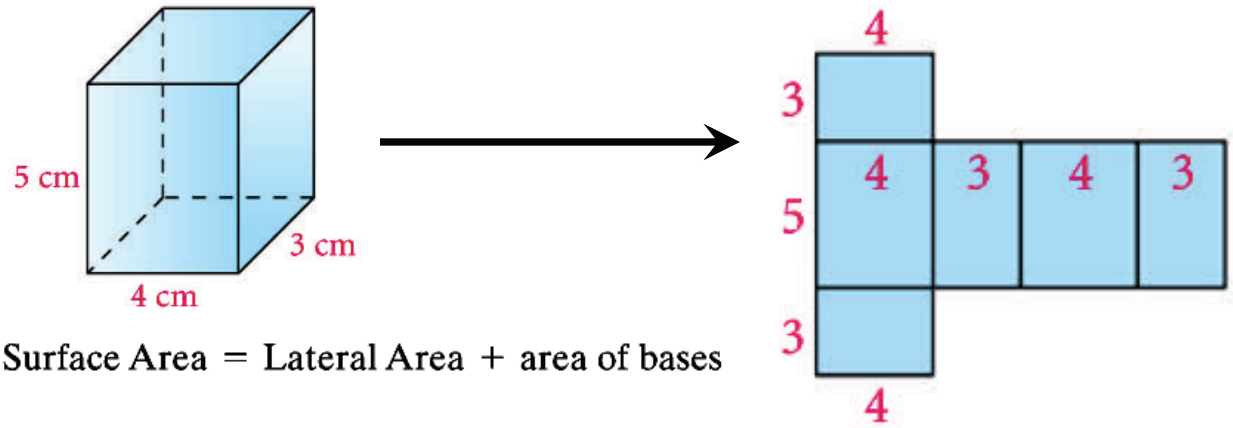

Surface Area = Lateral Area + area of bases

Example: Use a net to find the surface area of the triangular prism.

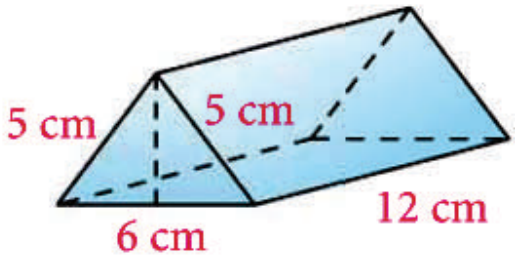

Notes:

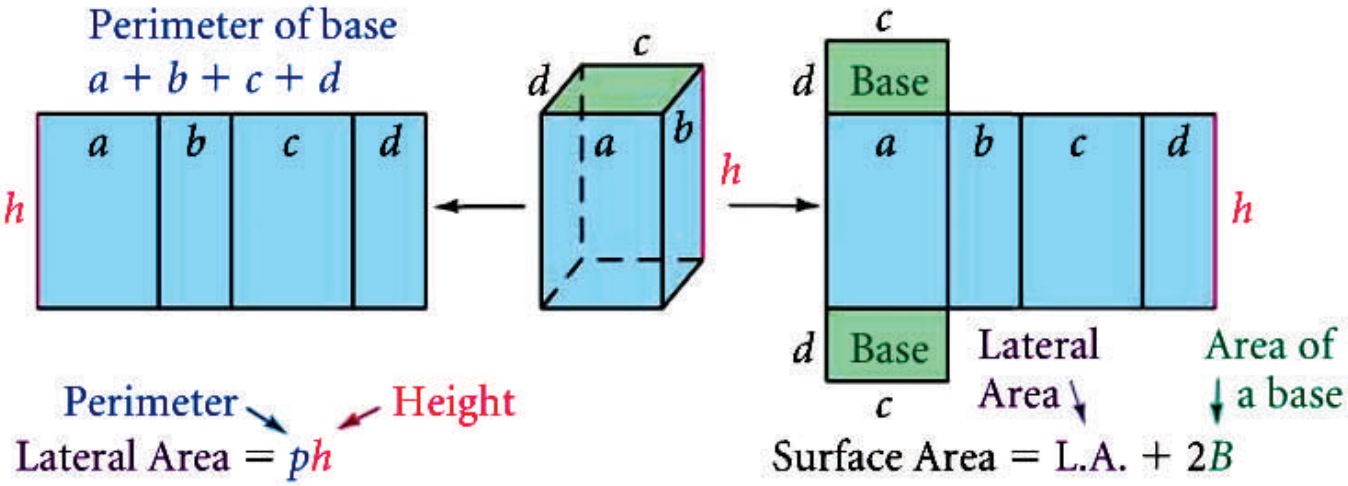

Using Formulas to Find Surface Area

Example:

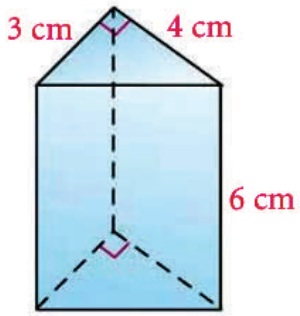

(A) 72 cm^2 (B) 78 cm^2 (C) 84 cm^2 (D) 96 cm^2

Example: Use formulas to find the lateral area and surface area of the prism.

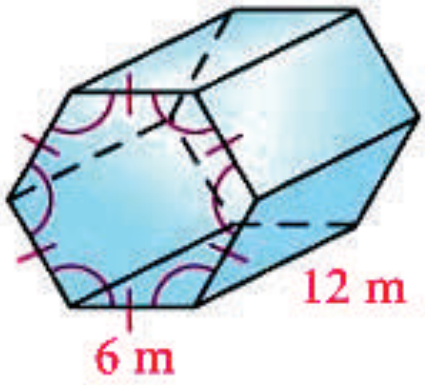

Assignment: **find the surface area of each prism.**

1.

2.

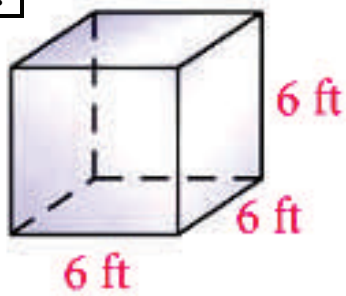

3.

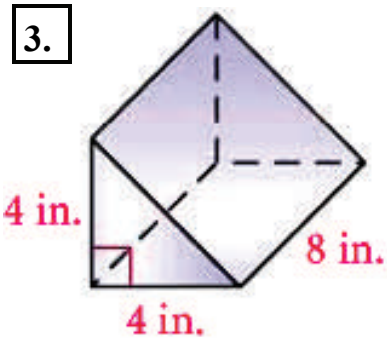

4.

a. Classify the prism.

b. Find the lateral area of the prism.

c. The bases are regular hexagons. Find the sum of their areas.

d. Find the surface area of the prism.

Use formulas to find the lateral area and surface area of each prism. Show your answer to the nearest whole number.

5.

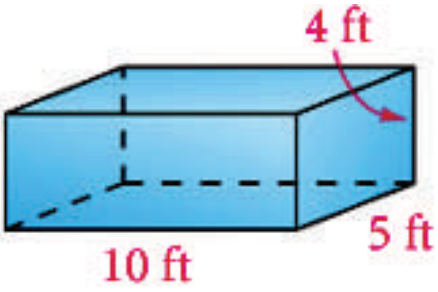

6.

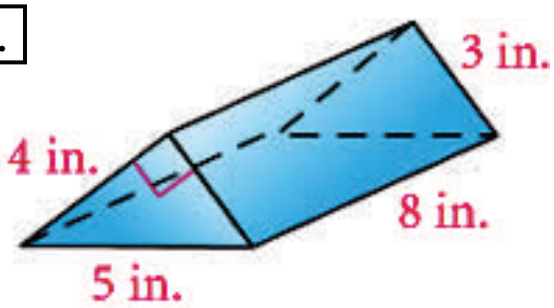

7.

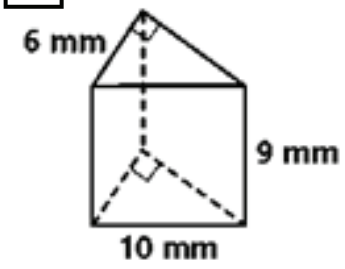

8.

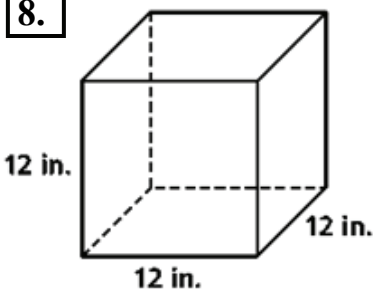

9.