Name:_____Date:_____Period:____

Quadratic Graphs and Factors Practice Test

Determine whether each function is linear or quadratic

1) $y = x^2 + 1$

2) $y = (x+1)(x-1)$

3) $2y = 3x - 1$

Graph each function

4) $y = (x+1)^2 - 3$

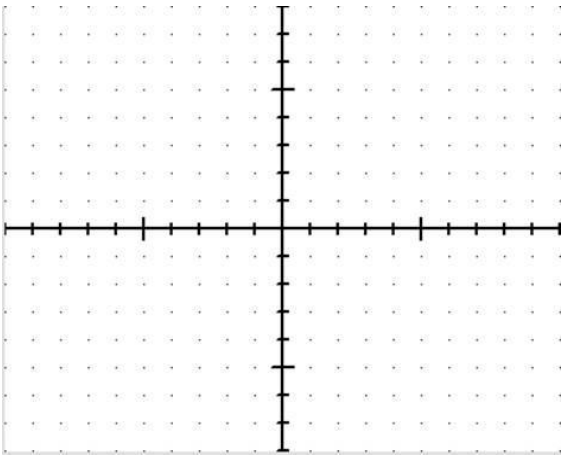

5) $y = -2x^2 + 4x + 3$

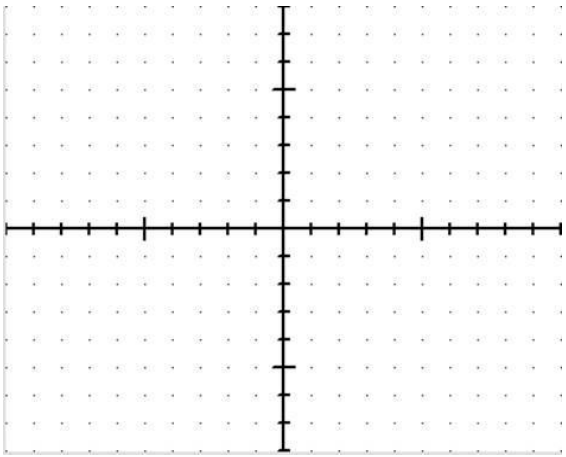

6) Write the equation of the parabola in ***vertex*** form

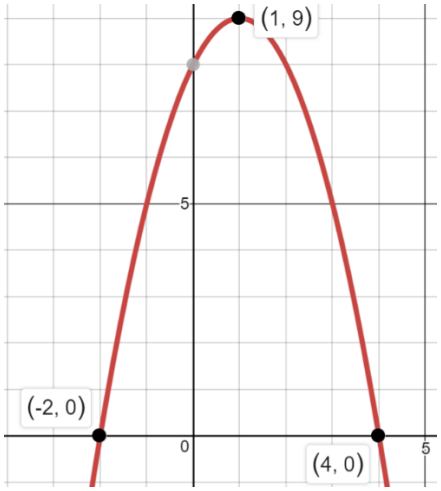

7) Write the equation of the parabola in ***standard*** form

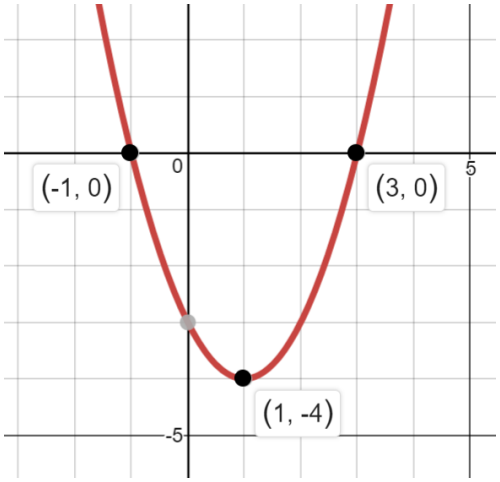

Factor each completely into an equivalent expression

8) $x^2 + 3x - 54$

9) $x^2 - 36$

10) $x^2 + 3x$

11) $x^2 + 10x + 24$

12) $x^2 - 6x - 16$

13) $7x^2 - 20x - 3$

14) $x^2 + 12x + 36$

15) $2x^2 - 5x - 12$

16) $4x^2 - 12x + 9$

Identify the axis of symmetry, the vertex, and the *y*-intercept.

17) $y = 4x^2 - 12x + 9$

18) $y = x^2 + 10x + 24$

Graph the parabola.

19) $y = x^2 - 6x + 9$