Name:_____Date:_____Period:_____

"5-2 Properties of Parabolas"

1) Multiply $y=(x-2)(x+1)$

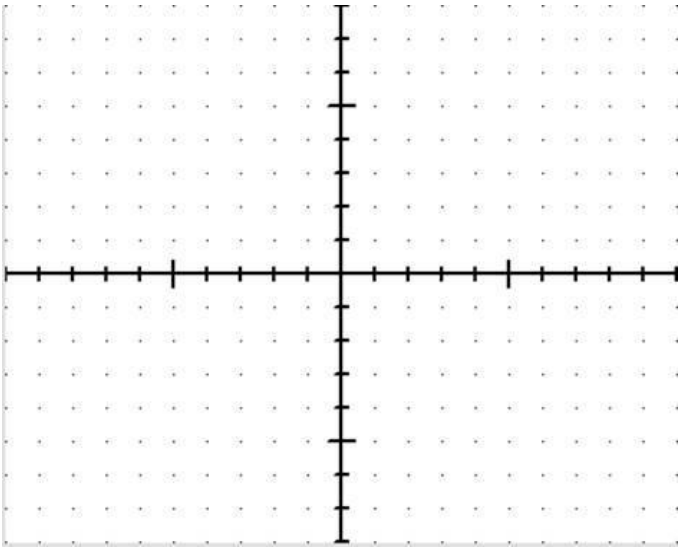

Put in standard form:_____

Identify *a*:____*b*:_____*c*:_____

Axis of Symmetry:_____

y-intercept:_____

x	y

2) Multiply $y=(2x+1)(x-2)$

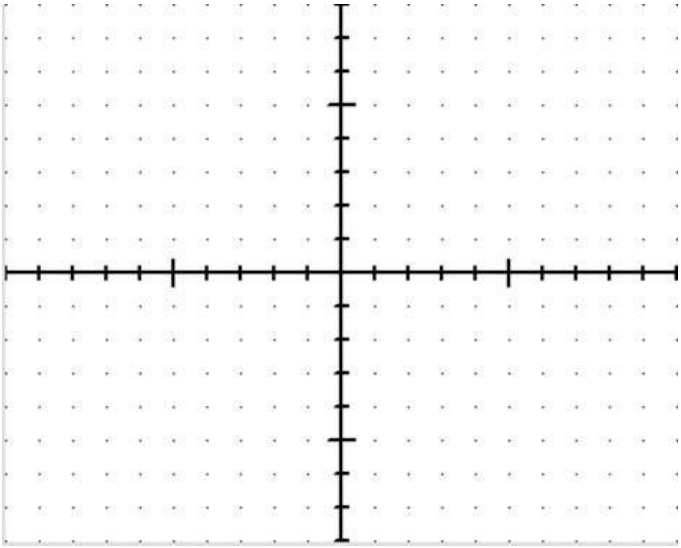

Put in standard form:_____

Identify *a*:____*b*:_____*c*:_____

Axis of Symmetry:_____

y-intercept:_____

x	y

3) Multiply $y=(1-x)(x+3)$

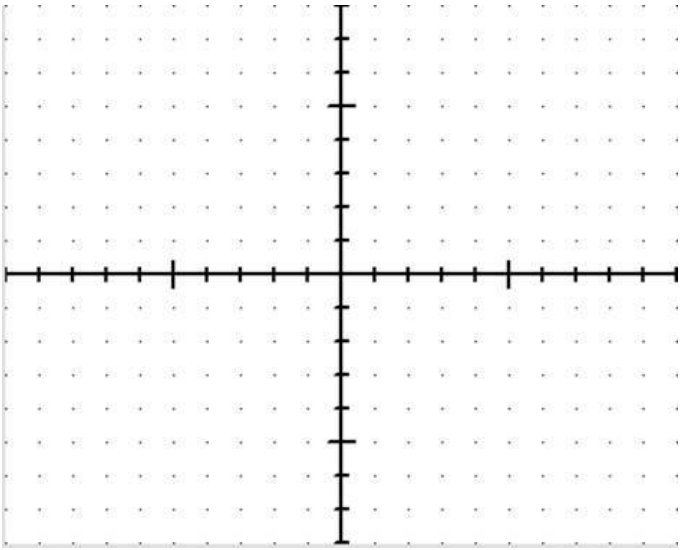

Put in standard form:_____

Identify *a*:____*b*:_____*c*:_____

Axis of Symmetry:_____

y-intercept:_____

x	y

4) Multiply $y=-x(x-4)$

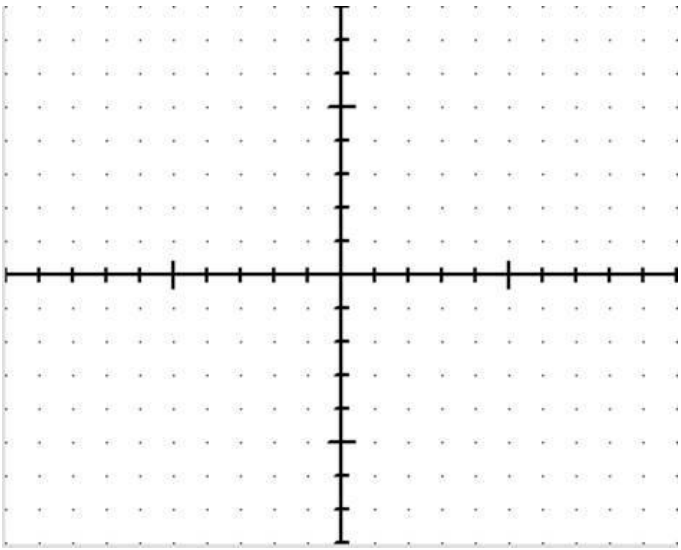

Put in standard form:_____

Identify *a*:____*b*:_____*c*:_____

Axis of Symmetry:_____

y-intercept:_____

x	y