Warm Up

Consider $\triangle HEG$.

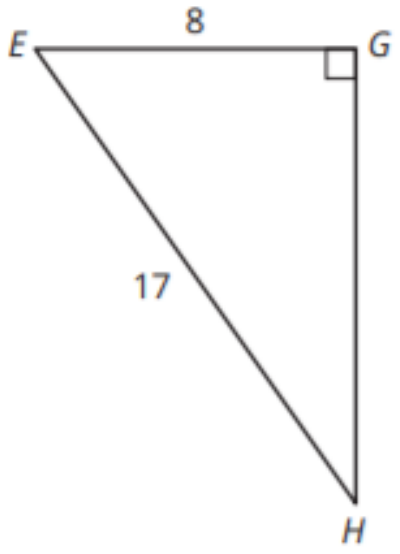

You need your scientific calculator and your trig table out!

1. Calculate the value of tan H. $\tan \angle H = \frac{8}{15}$

2. Calculate m$\angle H$. $\angle H = \tan^{-1}\left(\frac{8}{15}\right) \approx 28°$

3. Calculate m$\angle E$. $\angle E = 62°$

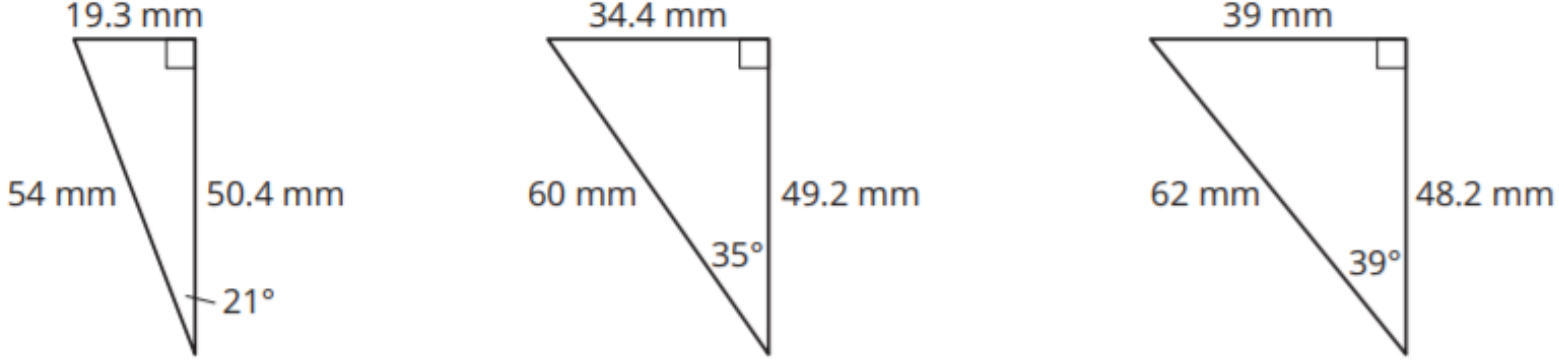

1. **How do you think the club face angle affects the path of the ball?**

$$\sin(21°) = \frac{19.3}{54} \approx 0.36 \qquad \sin(35°) = \frac{34.4}{60} \approx 0.57 \qquad \sin(39°) = \frac{39}{62} \approx 0.63$$

2. **For each club face angle, write the ratio of the side length opposite the given acute angle to the length of the hypotenuse. Write your answers as decimals rounded to the nearest hundredth.**

3. **What happens to this ratio as the angle measure gets larger?**

As the angle increases, the ratio increase as well!

The **sine (sin)** of an acute angle in a right triangle is the ratio of the length of the side that is opposite the angle to the length of the hypotenuse.

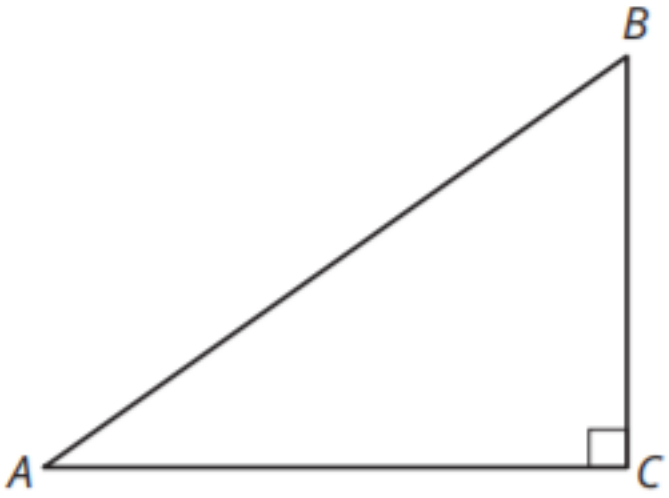

The expression "sin A" means "the sine of $\angle A$."

1. Complete the ratio that represents the sine of $\angle A$.

$$\sin A = \frac{\text{length of side opposite } \angle A}{\text{length of hypotenuse}} = \frac{BC}{AB}$$

The **cosecant (csc)** of an acute angle in a right triangle is the ratio of the length of the hypotenuse to the length of the side that is opposite the angle. The expression "csc A" means "the cosecant of $\angle A$."

2. Complete the ratio that represents the cosecant of $\angle A$.

$$\csc A = \frac{\text{length of hypotenuse}}{\text{length of opposite side } \angle A} = \frac{\boxed{AB}}{\boxed{BC}}$$

4. What do the sine values of the angles in Question 3 all have in common?

They are all less than 1.

5. Jun says that the sine and cosecant value of every acute angle is less than 1. Todd says that the sine value of every acute angle is less than 1, but the cosecant value is greater than 1. Who is correct? Explain your reasoning.

- **The sine of all acute angles is *less than* 1.**
- **The cosecant of all acute angles will be *greater than* 1, because the hypotenuse is always greater than the opposite side.**

6. **What happens to the sine and cosecant values of an angle as the measure of the angle increases?**

7. **You calculated the sine ratios for different club faces in the Getting Started and in Question 3. Consider a golf club with a club face angle $\angle A$ for which $\sin A \approx 0.45$. Estimate the measure of the club face angle based on the decimal value of the ratio. Use a calculator to verify your answer.**

8. Use the right triangles shown to calculate the values of sin 30°, sin 45°, and sin 60°. Leave your answers as exact values and rationalize the denominator.

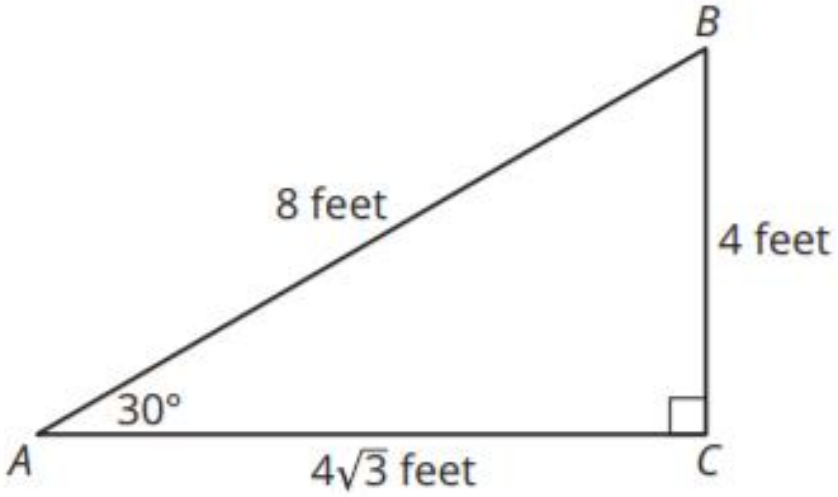

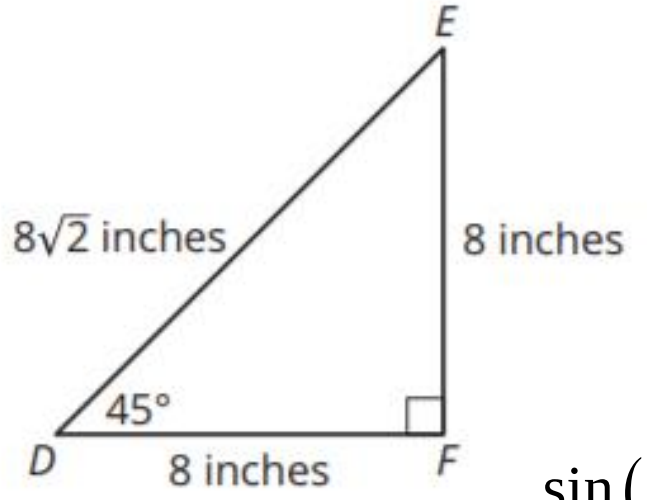

$$\sin(30°) = \frac{4}{8} = 0.5$$

$$\sin(60°) = \frac{4\sqrt{3}}{8} = \frac{\sqrt{3}}{2}$$

$$\sin(45°) = \frac{8}{8\sqrt{2}} = \frac{1}{\sqrt{2}}$$

$$\sin(45°) = \frac{1}{\sqrt{2}} \cdot \frac{\sqrt{2}}{\sqrt{2}} = \frac{\sqrt{2}}{2}$$

9. Two cables supporting the center pole of a circus tent are both connected at the top of the pole and are staked into the ground several feet apart. The length of the first cable is 30 feet and the length of the second cable is 46 feet. The angle formed by the pole and the first cable is 40°. The angle formed by the pole and the second cable is 55°. Label the diagram. Then calculate the height of center pole and the distance between the two stakes.