Name:_____Period:___ **Coordinates, Transformations, and Congruency Day 2 G.CO**

Step 1: Graph the **same**, *scalene* quadrilateral (with *different* lengths) in ***each*** of the graphs:

Step 2: List **All** of the original coordinates of the Preimage here: **Label the points** $ABCD$

Step 3: Use the transformation rule in each problem on the Preimage and identify the coordinates of the image $A'B'C'D'$ and color code your shapes.

1) $(x-3,\ y+4)$

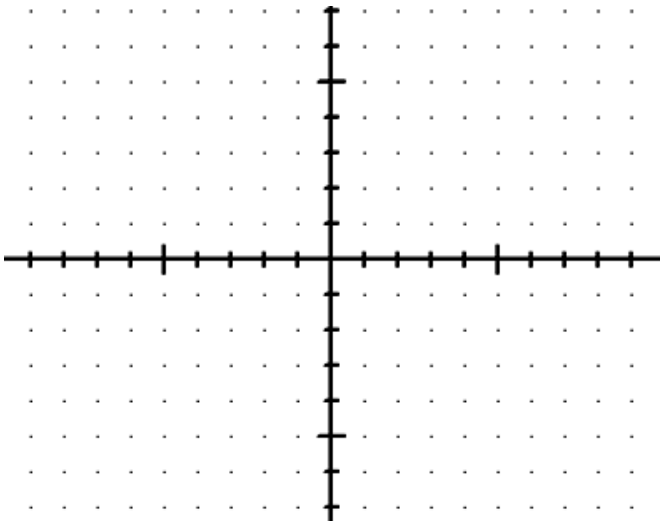

Label the image coordinate Points:

Describe the transformation:

2 $(y,\ -x)$

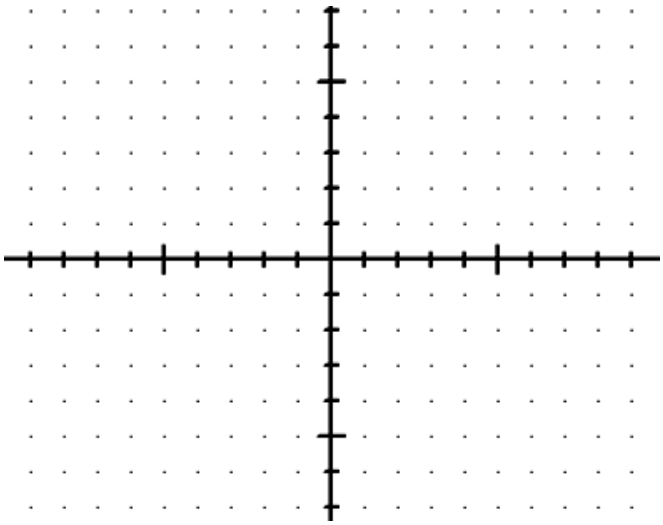

Label the image coordinate Points:

Describe the transformation:

3) $(-x,\ -y)$

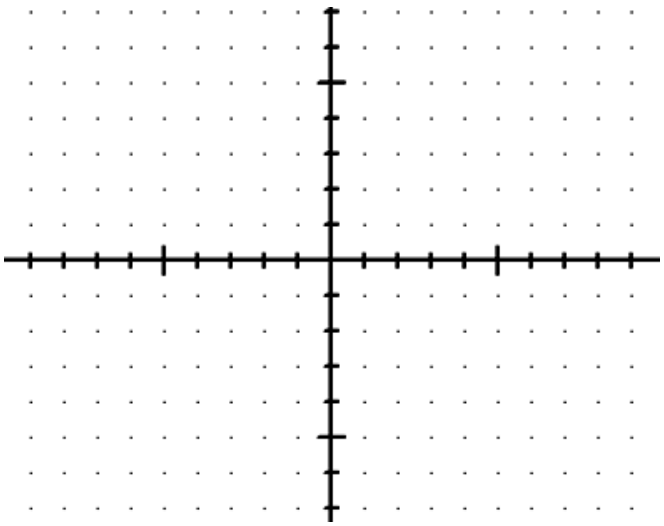

Label the image coordinate Points:

Describe the transformation:

4) $(-y,\ x)$

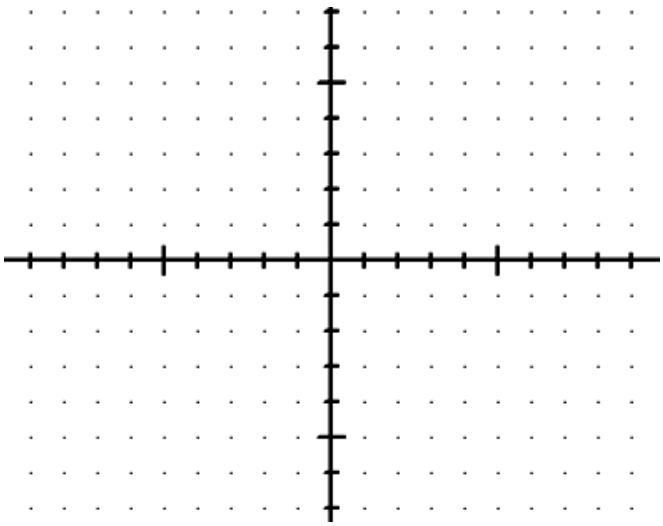

Label the image coordinate Points:

Describe the transformation:

Determine the coordinates of each rotated image without graphing.

5) The vertices of triangle *ABC* are *A* (5, 3), *B* (2, 8), and *C* (−4, 5). Rotate the triangle about the origin 90° counterclockwise to form triangle *A′ B′ C′*.

6) The vertices of rectangle *DEFG* are *D* (−7, 1), *E* (−7, 8), *F* (1, 8), and *G* (1, 1). Rotate the rectangle about the origin 180° counterclockwise to form rectangle *D′ E′ F′ G′*.

7) The vertices of parallelogram *HJKL* are *H* (2, −6), *J* (3, −1), *K* (7, −1), and *L* (6, −6). Rotate the parallelogram about the origin 90° counterclockwise to form parallelogram *H′ J′ K′ L′*.

8) The vertices of trapezoid *MNPQ* are *M* (−6, −5), *N* (0, −5), *P* (−1, 2), and *Q* (−4, 2). Rotate the trapezoid about the origin 180° counterclockwise to form trapezoid *M′ N′ P′ Q′*.

9) The vertices of triangle ABC are $A(-5, 10), B(1, 6)$, and $C(-2, -4)$. Rotate the triangle about the orign $270°$ clockwise to form triangle $A'B'C'$.

Identify the transformation used to create ΔXYZ on each coordinate plane. Identify the congruent angles and the congruent sides. Then, write a triangle congruence statement.

10)

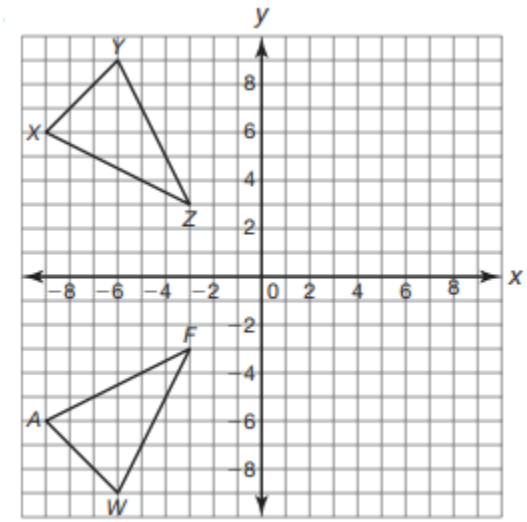

11)